LAY OUT
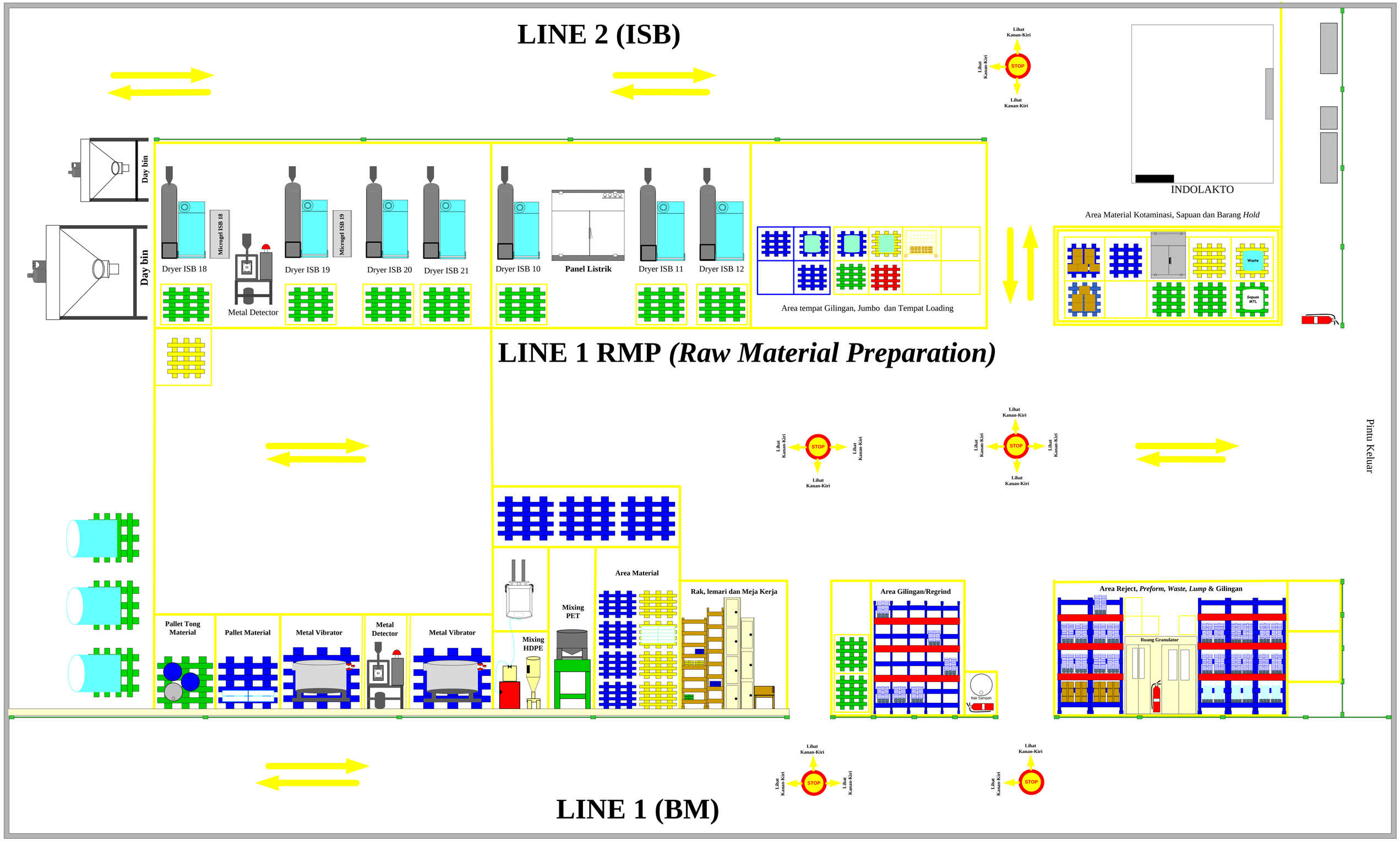
DEPT. RMP *(Raw Material Preparation)* PROD. 1